What are the new compared with our old version 5 axis CNC router?

1.Powermill and UG post processor free provided with this Destop Small Mini 5 Axis CNC Router Machine.This is very important , Because it can save at leat 3-5 days for your experienced engineer, and also means it will save your money around 300USD-700usd at least! Because ChinaCNCzone already have the best 5 axis CNC router engineer done for your fast and easy using!

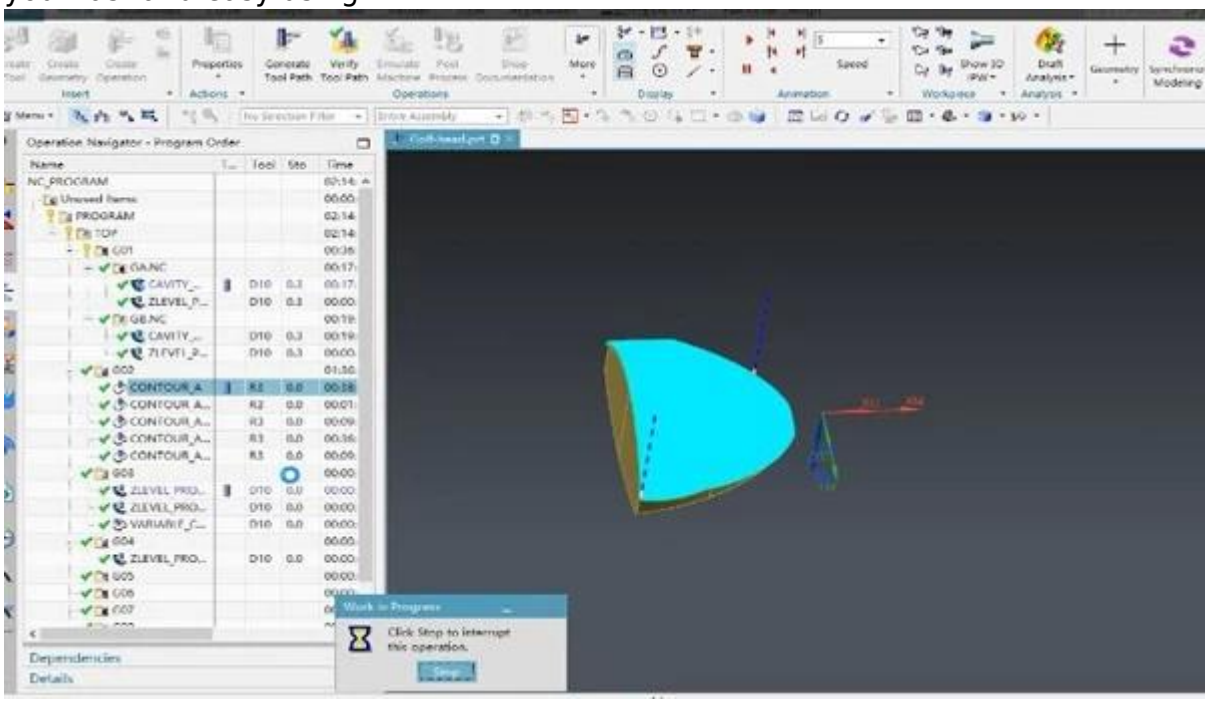

2. It supports USB connection! Plug and use, user friendly much more than parallel port!

3.Each axis is equipped with independent driver,higher accuracy and efficiency.

4.Larger stepper motor, larger holding torque for A.B axis, it ensures the larger fixed strength, accuracy and efficiency for A,B axis when do 5 axis cnc machining.
5.Specially design the fasteners for the 5th axis, and the vibration was reduced efficiently.
6.Provide the test G-code and technical support freely.
7.With stainless steel water tank.(the old is acrylic water tank)

What are the main features for this China Destop Small Mini 5 Axis CNC Router Machine HY 6040?

1.Integrated high-speed micro computer intelligent control chip.
2.With external digital LCD monitor
3. The working process can be tracked, recorded in the digital LCD monitor automatically.
4. Mach 3 software
5. Built in frequencey converter and without controller box.
6.Aluminum base sheet is heavy which can make sure no vibration when work.
7.With auto-checking function.
8.1500w/2200W frequency water-cooled spindle for your selection.
9. Ball screw.
10.CE approved.

11.Video support.
12.English manual available.
13.Mach 3 software send with the machine as a CD.
14.Can engraving aluminum and so on other hard material.
15. From reliable & trustable profesional China CNC Router manufacturer.

What are the parameters for this new China Destop Small Mini 5 Axis CNC Router Machine HY 6040

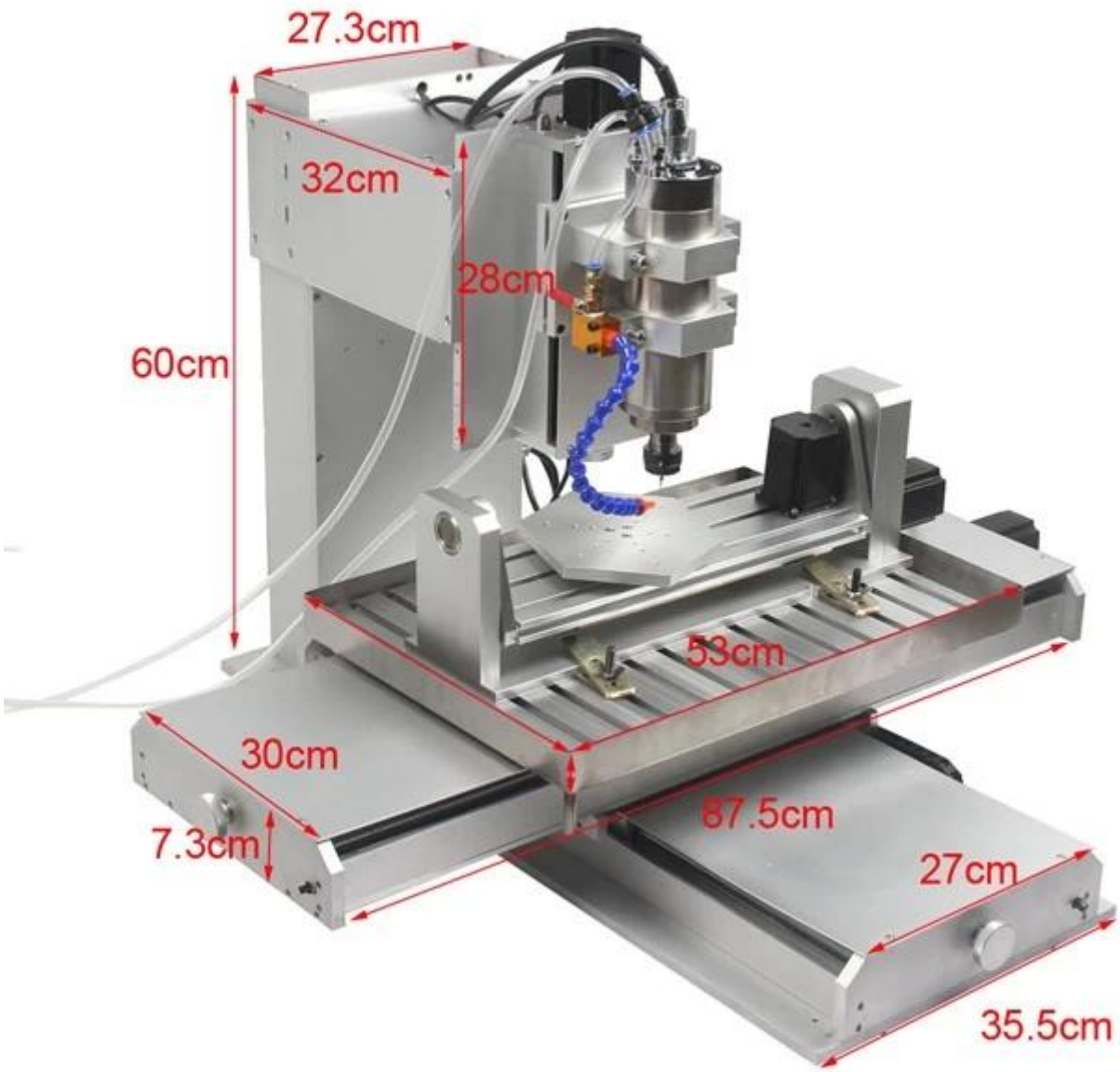

HY-6040

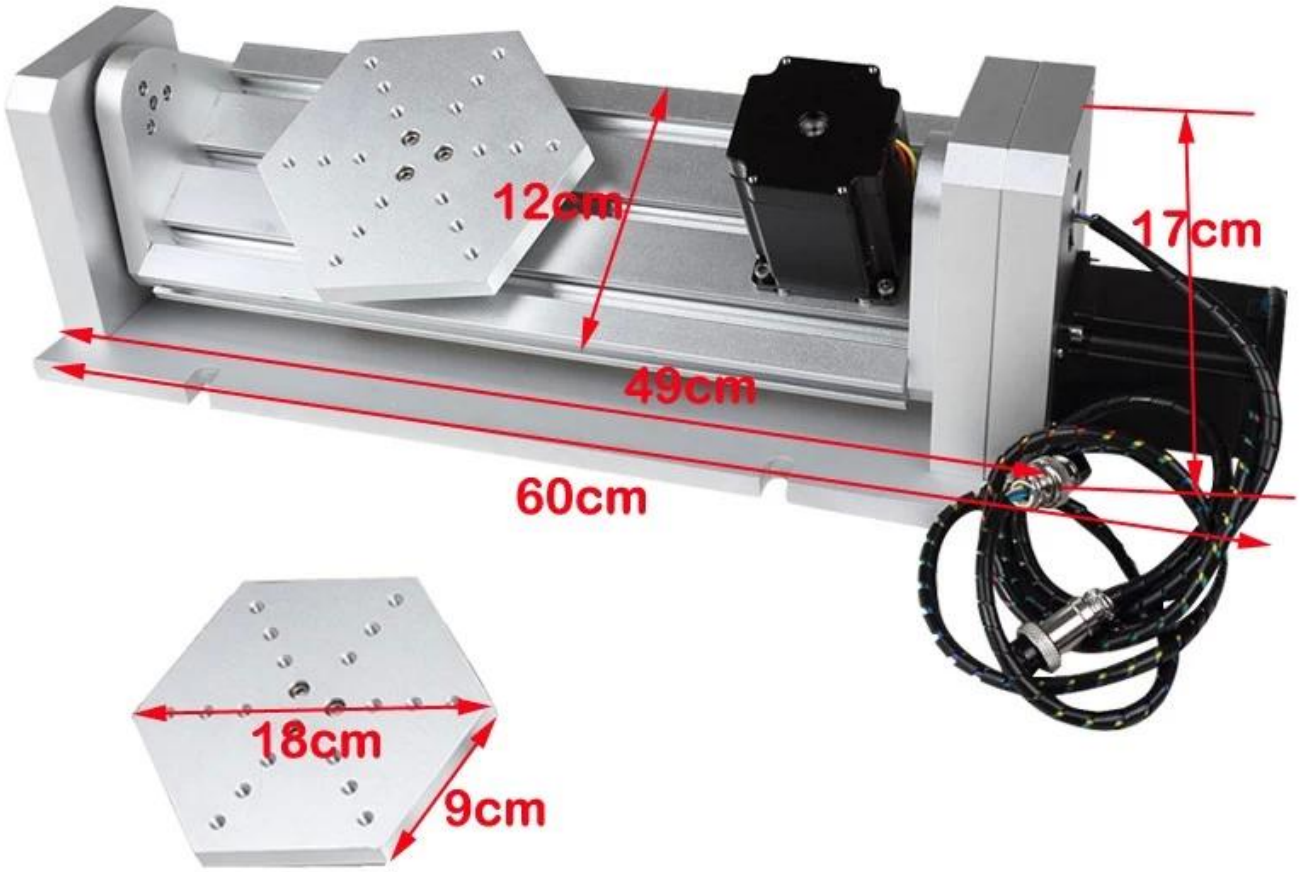

Parameters for this China Destop Small Mini 5 Axis CNC Router Machine HY 6040	
product dimension	715(H)*700(L)*610(W) mm
effective work area	600*400*150mm
precision ballscrew	1605
XYZ rail material	hard chrome shaft
XY rail diameter	20mm
Z rail diameter	16mm
XYZ axis torque	57*78 250 OZ/IN (2.2N/CM)
4th and 5th	57*56
4th and 5th transmission ratio	1:6
repeat positioning accuracy	0.01mm

working precision	0.02mm
processing speed	0-4000 mm/min
A-axis B-axis rotation speed	0-180 rpm/min
XY table maximum load	50kg
XY+A+B axis table maximum load	15kg
tailgate material	stainless steel
switching power supply	integrated 24V 350W
spindle power	1500W/ 2200W water-cooled frequency spindle
input power	220V/ 110V power supply
output current	drive 4.5A (peak 5A)
collet size	3/3.175/6mm if need others change into ER11 first
high efficiency water pump	55W, 46.6L /Min
drive motor	57*78 stepper motors (two-phase 4 wire)
engraving material	Metal,Brass, Acrylic, Wood, Aluminum, Stainless Steel
	(hardness less then 45 degree)
support computer system	windowXP
how to connect with computer	USB connection
software	MACH3 3.04
net weight	103kg
packing	wooden box
outside packing	88*96*92 (cm)
weight	149kg

More pictures for this China Destop Small Mini 5 Axis CNC Router Machine HY 6040

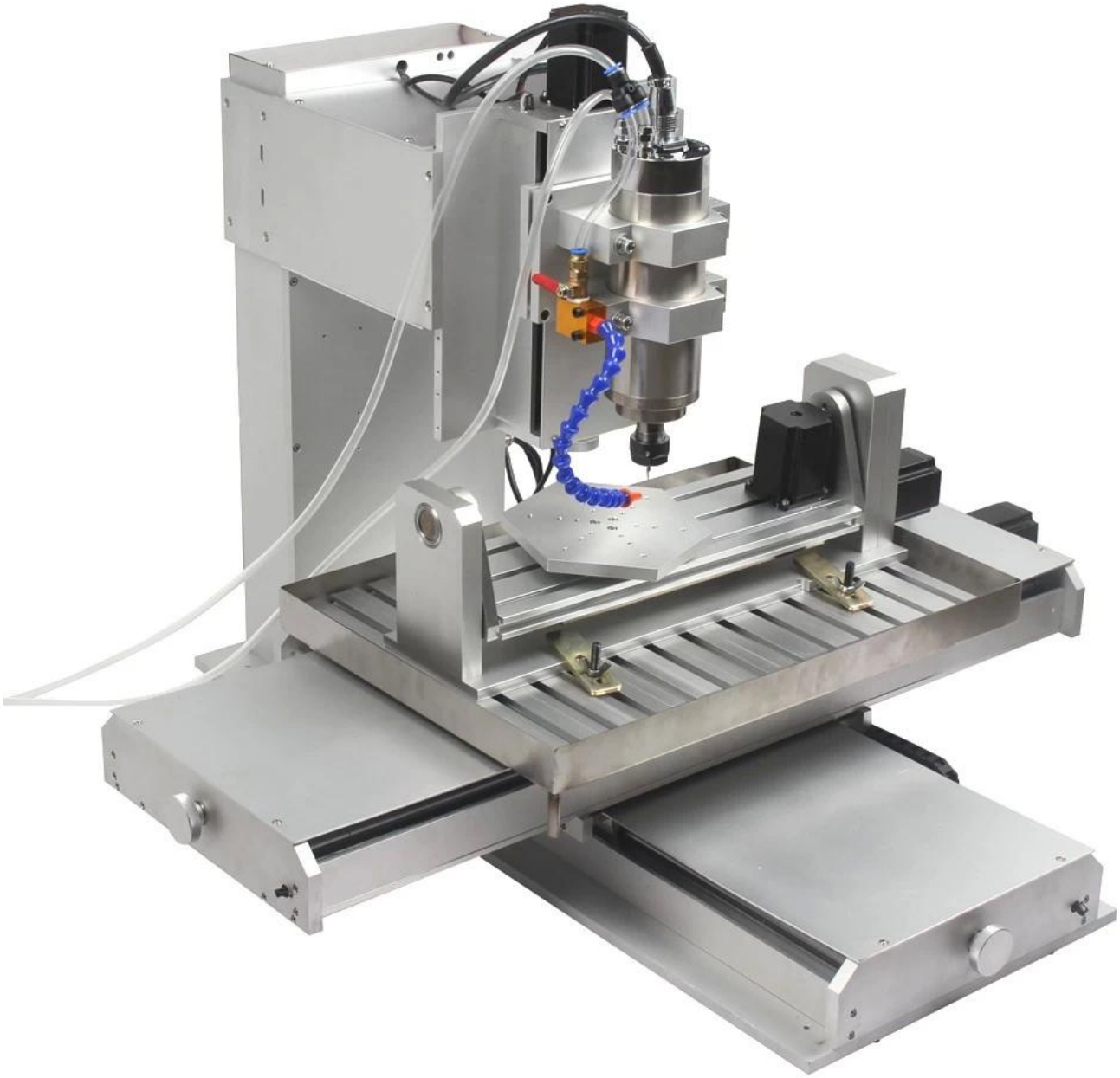

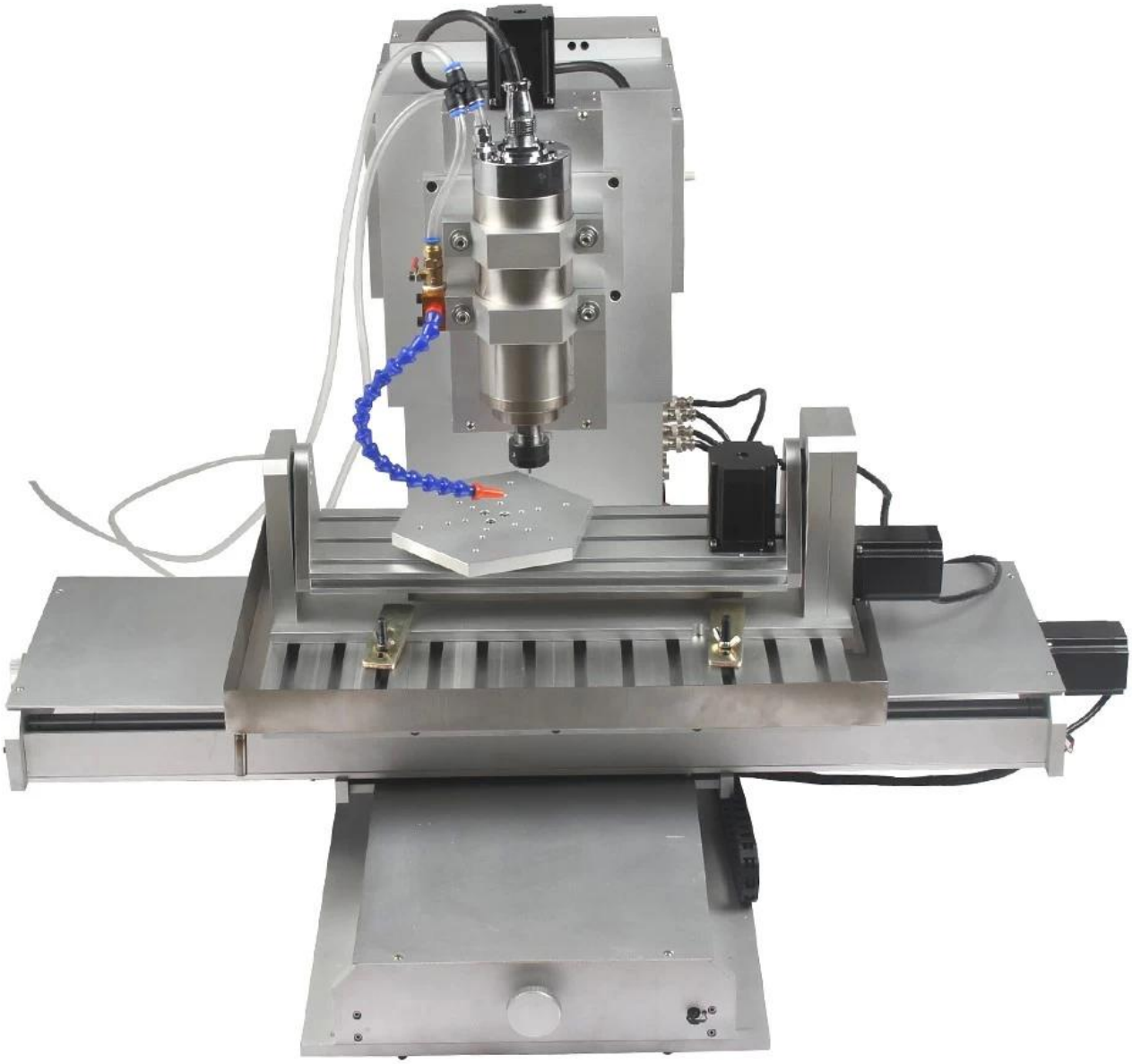

What this China Desktop Small Mini 5 Axis CNC Router Machine HY 6040 can do?

This new version mini 5 axis CNC router can be widely used to engrave wood, acrylic, brass, alumimun,PVC, PCB and so on. Through our test, it can engrave aluminum easily.

zippo
EL COACH
HIGH FASHION FABRIC
Wi-Fi
免费无线网络
A101
V1

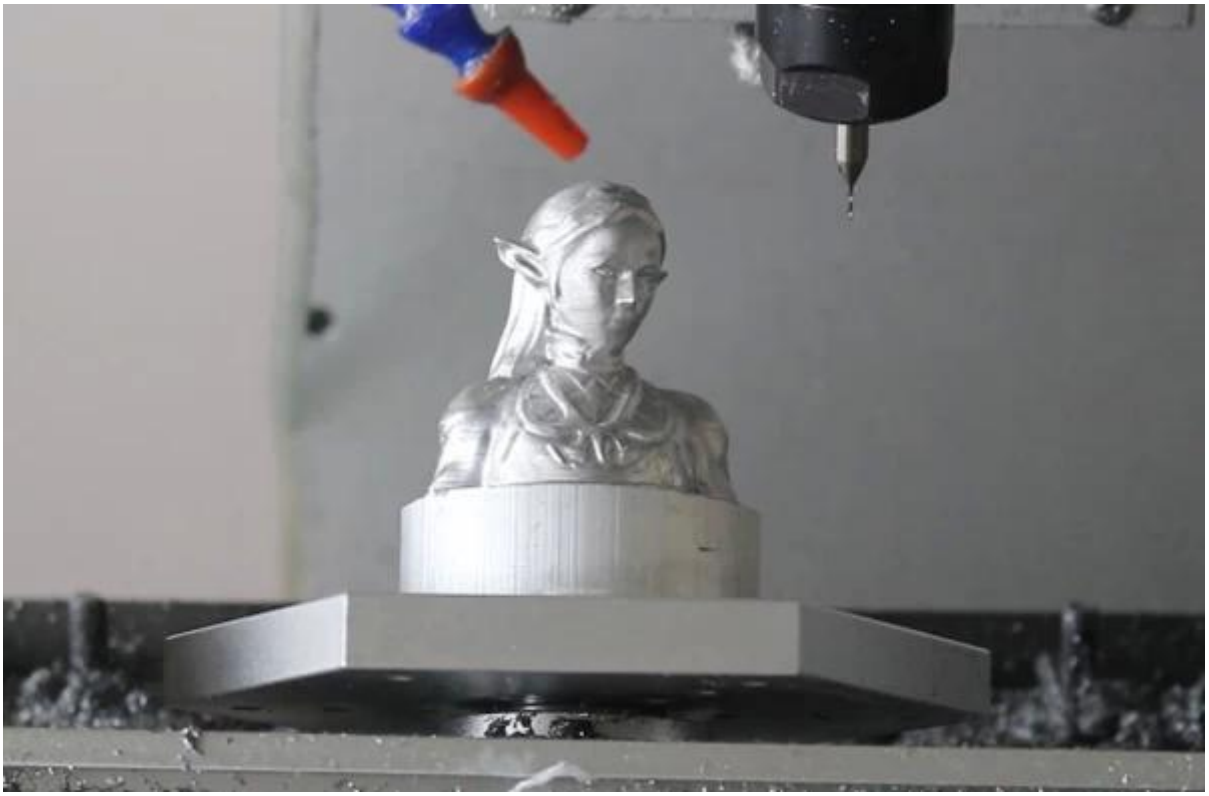

TRUST

TRUST 6
TRUST 6

nismo
nismo

nismo
nismo

nismo
nismo

nismo
nismo

05 Factory Tour

ChinaCNCzone team always welcome customers from all over the world to visit our factory, and let us provide the best diffirent models mini CNC router for users together.

QA Inspection Area

Mechanical Assembly Area

机器调试区
Machine Commissoning Area

成品测试区
Finish Products Area

Packaging Area

07 Company culture

ChinaCNCzone

百团大战 第一集团军蓝三团
蓝三团在此承诺
军令