ChinaCNCzone HY-3040 5 Axis CNC Millfor Sale

FREE TAX!!! to EU and RU!!!

1/ We will ship this machine to Moscow by Toanda from China,and transfer to you from Moscow by Russia local shipping company with door todoor shipping way. the machine will be deliveried to your home.

the delivery time is usually 20-40 days. and notax fee by this way!

2/ Germany/ United Kingdom/ France/ Spain/ Italy/ Poland

Austria/ Belgium/ Czech Republic/ Denmark/ Lithuania/ Bulgaria/ Estonia/Greece/ Romania/ Slovenia/ Croatia/ Luxembourg/ Finland/ Ireland/ Portugal/Sweden

All above countrybuyers free tax!!!we will ship by train to Poland, and transfer to your door byEU local shipping.

Higher precision:

- Heavier steel structure
- XHC control boa
- 2200w water-cooledspindle
- Ball screw
- Integrated high-speedmicro computer intelligent control chip.
- First STEEL STRUCTURECNC3040 5axis in the Market
- Mach 3 software, supportsWin10
- Built in frequencey converterand without controller box
- Applicable to steel,aluminum, brass, copper, stone, granite etc.

You can buy this machinefrom us without any worry:

- CEapproved.
- Videosupport.
- English manual available.
- Mach 3software send with the machine as a CD.
- Canengrave material which hardness below 45.
- Fromreliable & trustable profesional China CNC Router manufacturer

ChangSheng Water
Cooling Spindle
AB shaft adopts
Japanese Harmonic
reducer

.

Machine model: Steel structure 3040 5axis

Material: 304# stainless steel

Rough process: End mill: φ6, RPM:8500, Feed:1500mmpm, Zaxis each time cut:0.15mm

Rough process: End mill: φ4, RPM:8500, Feed:1500mmpm, Zaxis each time cut:0.15mm

Rough process: End mill: φ2, RPM:10000, Feed:1500mmpm, Zaxis each time cut:0.1mm

Milling process: Ball mill: R2, RPM:10000, Feed:2500mmpm

Milling process: Flat mill:45° , RPM:12000, Feed:800mmpm

Before

After

Machine model: Steel structure 3040 5axis

Material: Metal lead

Rough process: End mill: φ6, RPM:12000, Feed:1200mmpm, Zaxis each time cut:0.3mm

Milling process: Ball mill: R2, RPM:12000, Feed:2000mmpm, Zaxis each time cut:0.05mm

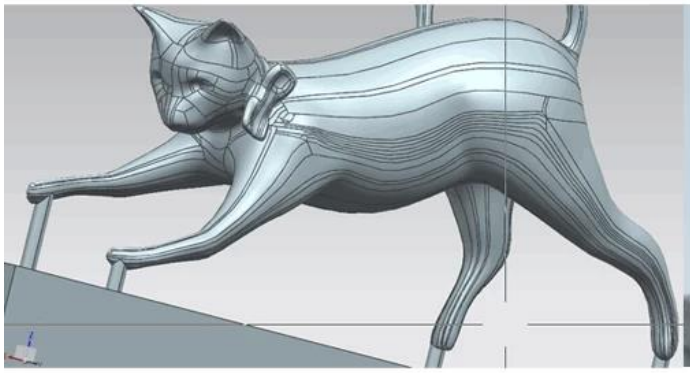

3D model

Finished work

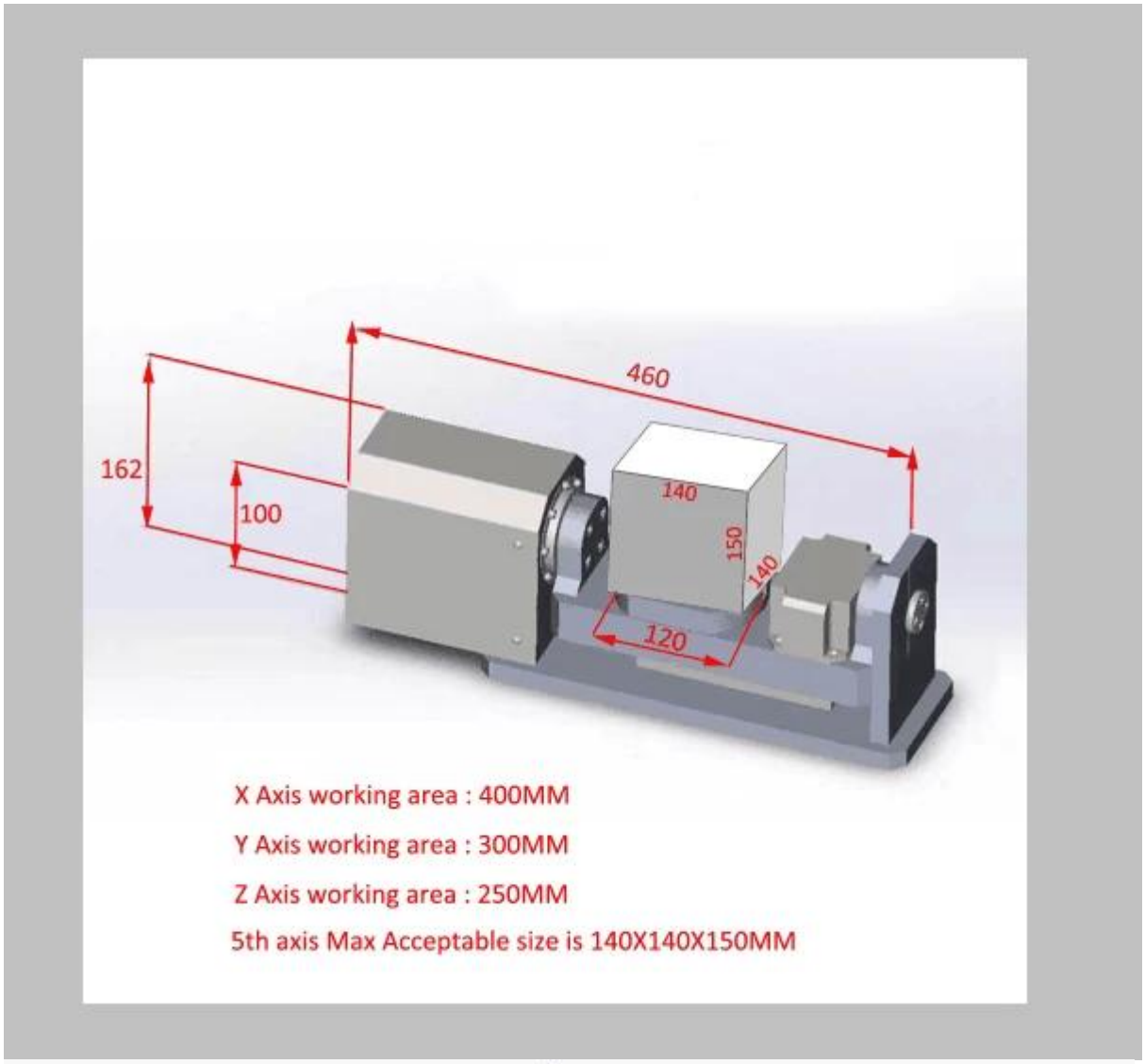

Q&A:

1/ It is said that 5 axis programming is complicated, what can ido if I don’t know how to program 5 axis code?

We have experienced 5 axis technician to help you with designing. We offer paidservice for 5 axis programing

2/ What is the accuracy of this machine?
0.05mm

3/ What is the maximumpiece the machine can process?
155*155*105mm

4/ If i bought this machine, where could I learn the software?

We offer mach3 and NX/UG post processor

5/ What kind of servicedo you provide?

We offer remote control service during China work time

After-sales service process :

1/ After-sales service contains:
a. Machine installation and adjustment
b. Software Settings and using (not include G codeprogramming)
c. Machine quality problem
d. the machine using problem

2/ When the machine have problem:
a. Machine problem pictures or video is asked.
b. General problem solve way will be supplied in 1~2 days,
Complex problem solve way will be suppliedin 2~3 days.

3/ General problem solve way: (Machine warranty is 1 year, Cutters don’thave warranty, they are consumables)
a. Machine operation and installation problem, we will supplyvideo or pictures to show you.
b. Machine quality problem, machine parts will be resent free

Company Information

why? CHOOSE US

Reliable manufacturer
Over 10-year CNC experience
5 axis technical support
NX post processor provided
First USB connection mini 5 axis machine in the Market
Real simultaneous 5 axis motion

ChinaCNCzone

Engineer Guo
Senior Engineer
10-year CNC operating experience

Skilled at Artcam, Powermill, UG/NX, MasterCAM
Skilled at Mitsubishi, Funac, Syntec, Siemens, Mach3, USBCNC control software
Unique idea to improve metal processing precision

ChinaCNCzone

Engineer Zhu
Senior Engineer
8-year CNC operating experience

Skilled at Artcam, Powermll, UG/NX etc.
Skilled at Mach3, USBCNC control software etc.
Unique perception of wood engraving

Our factory

QA Inspection Area

Mechanical Assembly Area

机器调试区
Machine Commissoning Area

成品测试区
Finish Products Area

China CNC zone
CE
Packaging Area

Company culture